circutec

Product data sheet

Centrifugal pump

Heat transfer pump with magnetic coupling for mineral and synthetic thermal oil
Available with volute casing or inline casing

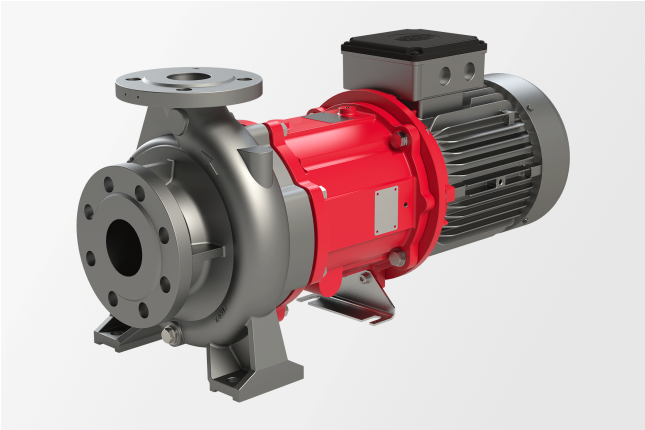

Description

- Centrifugal/heat transfer pump
- Suitable for mineral and synthetic thermal oils
- Magnetic coupling
- Free-flying shaft or bracket pump
- Volute casing and inline casing (not all sizes)
- Spheroidal graphite iron version: min -40°C, max. +400 °C
- Version made of stainless steel (not all sizes): min. -100°C, max. 250°C
- TOE modular system

Markets and applications

Renewable energies

- Thermal oil or cooling brine in solar parks

Industrial cooling

- Chillers/cooling machines

Heating and cooling technology

- Thermal oil ovens
- Thermal oil systems
- Calenders
- Industrial deep-fat fryers
- Transportation of cooling brine

Get in touch with us!

SPECK Australia
Unit 2, 6 Glory Road
Gnangara WA 6077 Australia
Phone NZ: +61 8 6201 1286

Make a non-binding enquiry

sales@speckaustralia.com

Technical data

International system of units, alternating current 50 Hz

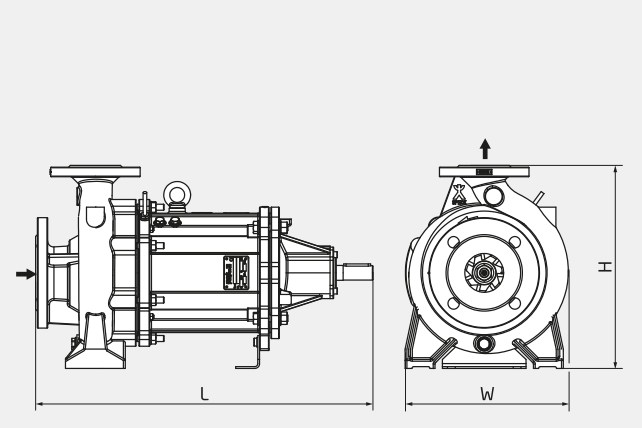

H	192–565 mm
W	237–524 mm
L	465–625 mm

Dimensions may vary depending on the design.

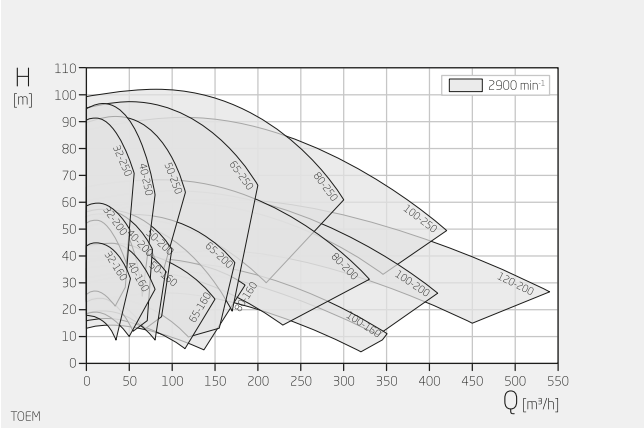

Specifications apply for water at 20°C and nominal speed.

Product type	Centrifugal pump
Shaft sealing/coupling	None/magnetic coupling
Pump design	Free-flying shaft or bracket version
Typical media	Spheroidal graphite cast iron version: Mineral or synthetic thermal oil min. -40 °C, max. +400 °C Spheroidal graphite cast iron version: Mineral or synthetic thermal oil min. -100 °C, max. +250 °C
Self-priming	No
Variable speed	Frequency-converter-compatible motor on request
Total head	5–103 m
Flow rate	5.0–540.0 m³/h
Nominal pressure	PN 16
Nominal motor speed	2900 rpm
Suction-side connection design	Flange in acc. with DIN EN 1092 Flange in acc. with DIN EN 1092, drilled in acc. with ANSI 150 lbs
Suction-side connection size	DN 50 – DN 150
Pressure-side connection design	Flange in acc. with DIN EN 1092 Flange in acc. with DIN EN 1092, drilled in acc. with ANSI 150 lbs
Pressure-side connection size	DN 32 – DN 125
Material designs	Spheroidal graphite cast iron Stainless steel (not all sizes)
Explosion protection	None II 3G, II 3D II 2G, II 2D

Technical data

International system of units, alternating current 60 Hz

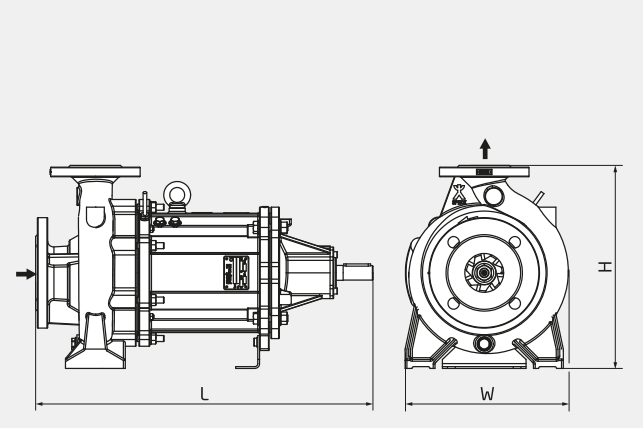

H	192–565 mm
W	237–524 mm
L	465–625 mm

Dimensions may vary depending on the design.

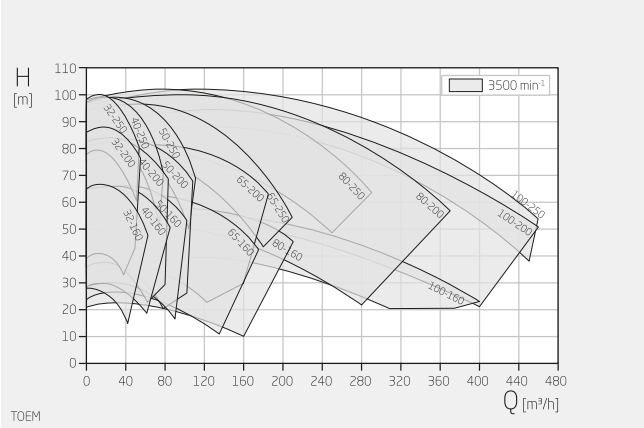

Specifications apply for water at 20°C and nominal speed.

Product type	Centrifugal pump
Shaft sealing/coupling	None/magnetic coupling
Pump design	Free-flying shaft or bracket version
Typical media	Spheroidal graphite cast iron version: Mineral or synthetic thermal oil min. -40 °C, max. +400 °C Spheroidal graphite cast iron version: Mineral or synthetic thermal oil min. -100 °C, max. +250 °C
Self-priming	No
Variable speed	Frequency-converter-compatible motor on request
Total head	10–103 m
Flow rate	6.0–460.0 m³/h
Nominal pressure	PN 16
Nominal motor speed	3500 rpm
Suction-side connection design	Flange in acc. with DIN EN 1092 Flange in acc. with DIN EN 1092, drilled in acc. with ANSI 150 lbs
Suction-side connection size	DN 50 – DN 150
Pressure-side connection design	Flange in acc. with DIN EN 1092 Flange in acc. with DIN EN 1092, drilled in acc. with ANSI 150 lbs
Pressure-side connection size	DN 32 – DN 125
Material designs	Spheroidal graphite cast iron Stainless steel (not all sizes)
Explosion protection	None II 3G, II 3D II 2G, II 2D

Technical data

Anglo-American system of measurement, alternating current 60 Hz

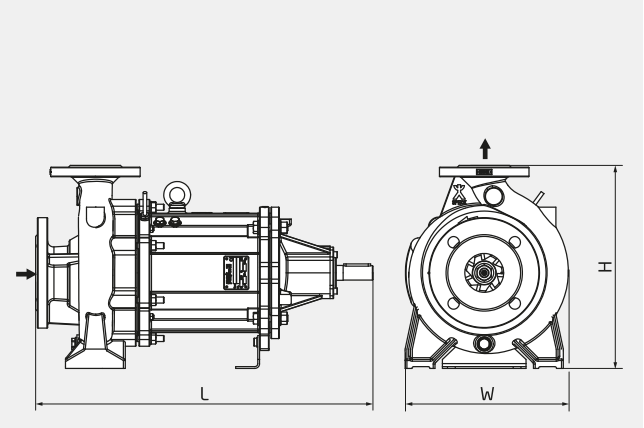

H	7,56–22,24 inch
W	9,33–20,63 inch
L	18,31–24,61 inch

Dimensions may vary depending on the design.

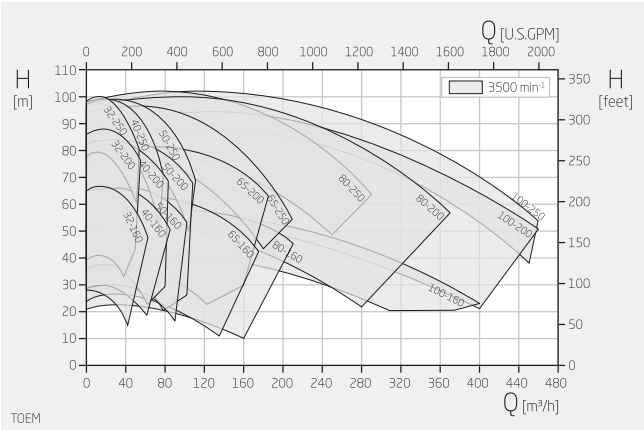

Specifications apply for water at 68°F and nominal speed.

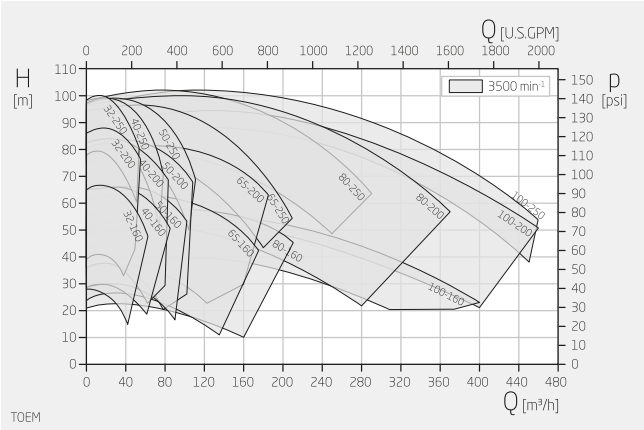

Specifications apply for water at 68°F and nominal speed.

Product type	Centrifugal pump
Shaft sealing/coupling	None/magnetic coupling
Pump design	Free-flying shaft or bracket version
Typical media	Spheroidal graphite cast iron version: Mineral or synthetic thermal oil min. -40 °F, max. +752 °F Spheroidal graphite cast iron version: Mineral or synthetic thermal oil min. -148 °F, max. +482 °F
Self-priming	No
Variable speed	Frequency-converter-compatible motor on request
Total head	33–338 ft
Flow rate	26.4–2025.3 USGPM
Nominal pressure	PN 16
Nominal motor speed	3500 rpm
Suction-side connection design	Flange in acc. with DIN EN 1092 Flange in acc. with DIN EN 1092, drilled in acc. with ANSI 150 lbs
Suction-side connection size	DN 50 – DN 150
Pressure-side connection design	Flange in acc. with DIN EN 1092 Flange in acc. with DIN EN 1092, drilled in acc. with ANSI 150 lbs
Pressure-side connection size	DN 32 – DN 125
Material designs	Spheroidal graphite cast iron Stainless steel (not all sizes)
Explosion protection	None II 3G, II 3D II 2G, II 2D